FLUID COOLED LASER DIODE ARRAY

T6Air™

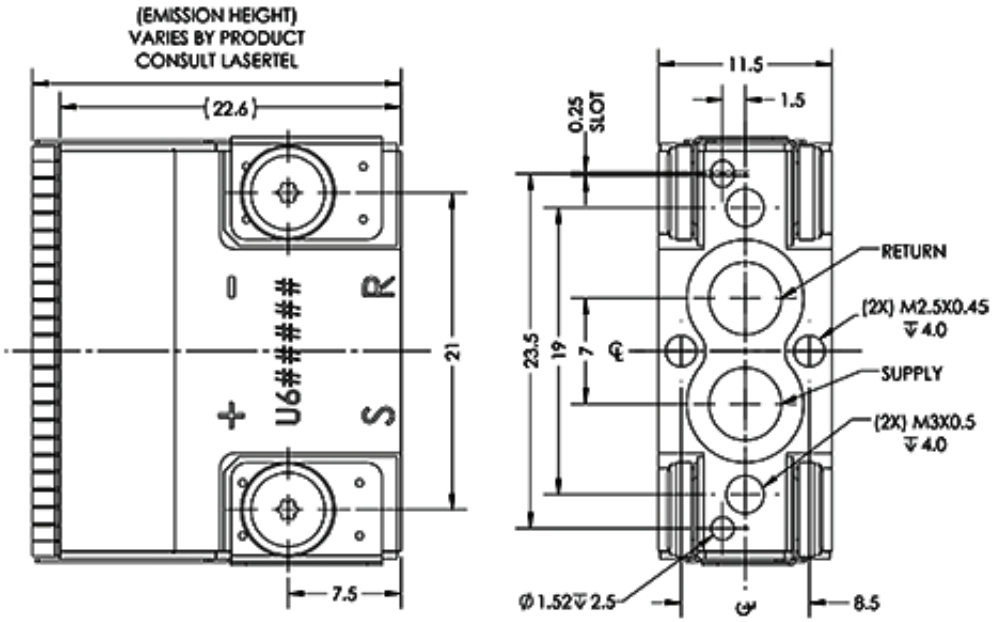

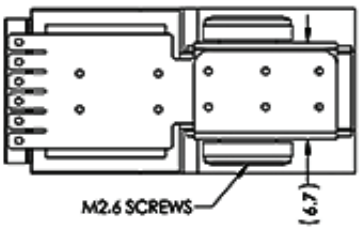

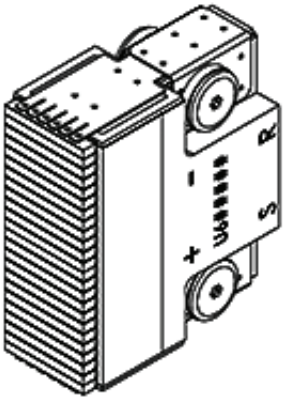

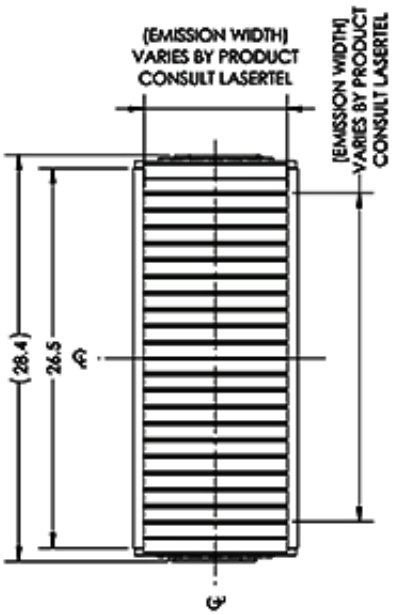

LASERTEL
a LEONARDO company

Lasertel products proudly made in the USA
P: +1 877.844.1444 E: SALES@LASERTEL.COM

TYPICAL SPECIFICATIONS

760nm - 1100nm					
TYPICAL OPTICAL PARAMETERS (@25°C)	**Units**	**Typical Value**			
Array Peak Output Power	W	1600	2000	2400	25000
Bar Emission Length	mm	10			
Operation Mode		CW			Pulsed
Operating Current	A	90	105	125	550
Number of Bars	#	up to 20			up to 50
Operating Voltage per Bar (760nm - 830nm)	V	1.9			2
Operating Voltage per Bar (850nm - 1100nm)	V	1.7			1.8
Power Conversion Efficiency	%	58			56
Bar to Bar Pitch	mm	1.1			0.35
Beam Divergence					
Fast Axis (FWHM)	°	36			32
Slow Axis (FWHM)	°	10			

1400nm - 1700nm		
TYPICAL OPTICAL PARAMETERS (@25°C)	**Units**	**Typical Value**
Array Peak Output Power	W	500
Bar Emission Length	mm	10
Operation Mode		CW
Operating Current	A	80
Number of Bars	#	up to 20
Operating Voltage per Bar	V	1.5
Power Conversion Efficiency	%	25
Bar to Bar Pitch	mm	1.1
Beam Divergence		
Fast Axis (FWHM)	°	27
Slow Axis (FWHM)	°	10

LASERTEL
a LEONARDO company

Lasertel products proudly made in the USA
P: +1 877.844.1444 E: SALES@LASERTEL.COM